SUMMERSET

28x26" 2.7c Drop-in Cooler w/ 40lb Ice Capacity

Model	SSIC-28
Cutout Dimensions*	W26 1/4" x H12 1/4" x D18 3/4"
Overall Dimensions**	W27 3/4" x H14 1/4" x D20 3/4"

#304 Stainless Steel Construction

Fully Insulated Ice Chest Basin

Gasket Sealed for Temperature Control

Double Lined for Extra Insulation

Stainless Steel Drain Included

*** Manufacturer Suggested Cutout Dimensions**

**** Manufacturer Approximate Overall Dimensions**

Notes

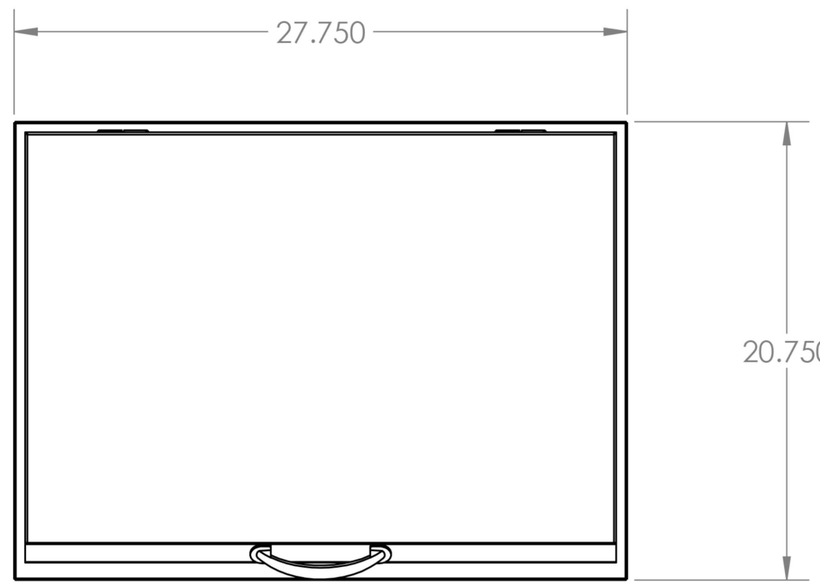

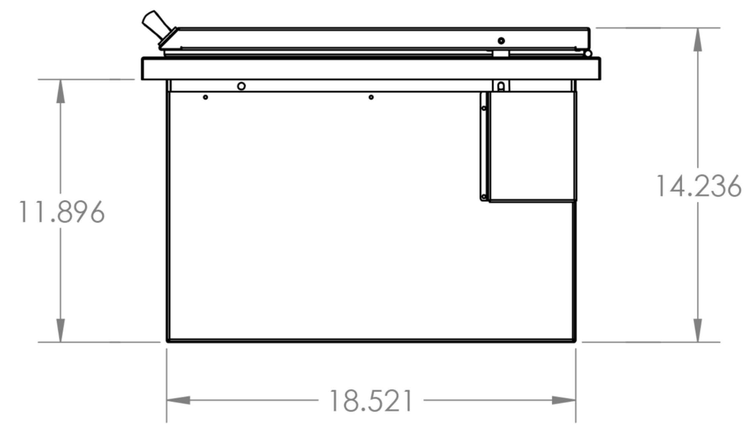

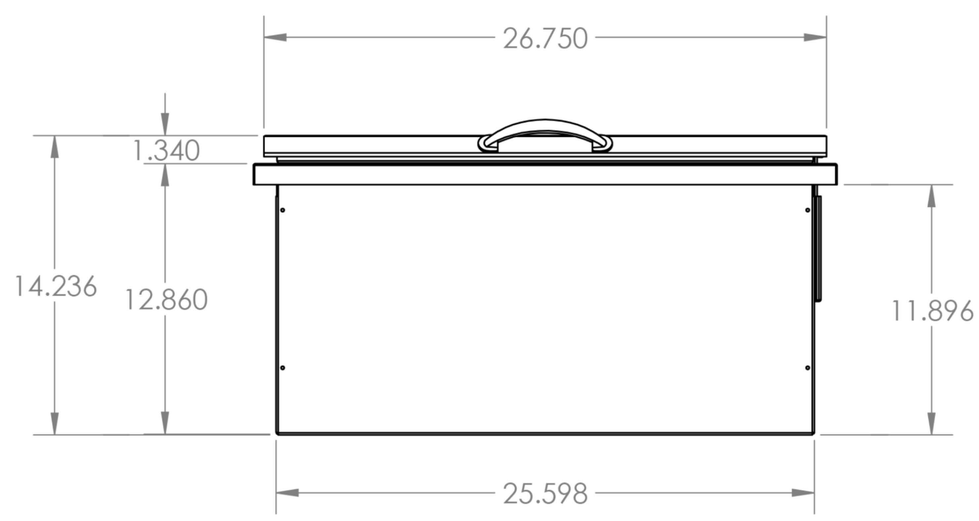

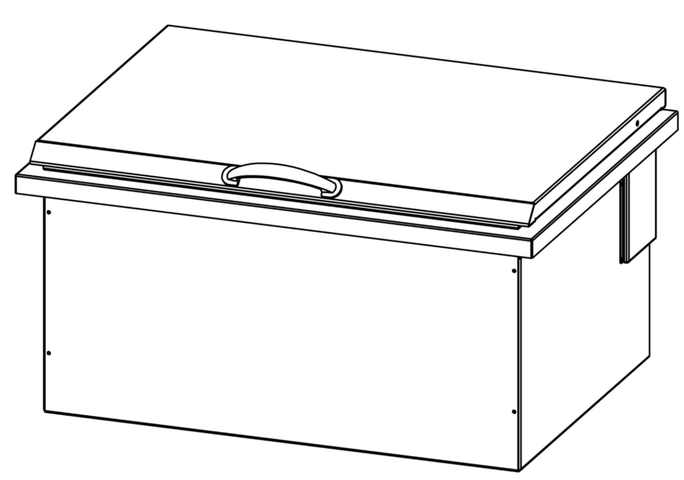

Suggested Cutout Dimensions*

(W) 26 1/4" x (H) 12 1/4" x (D) 18 3/4"

Island Top View

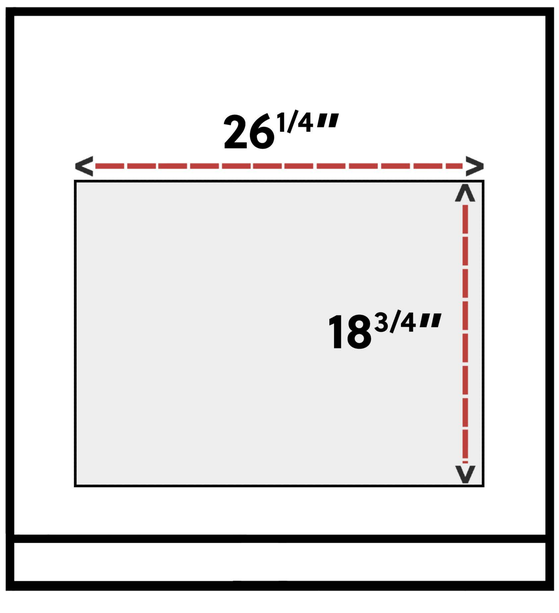
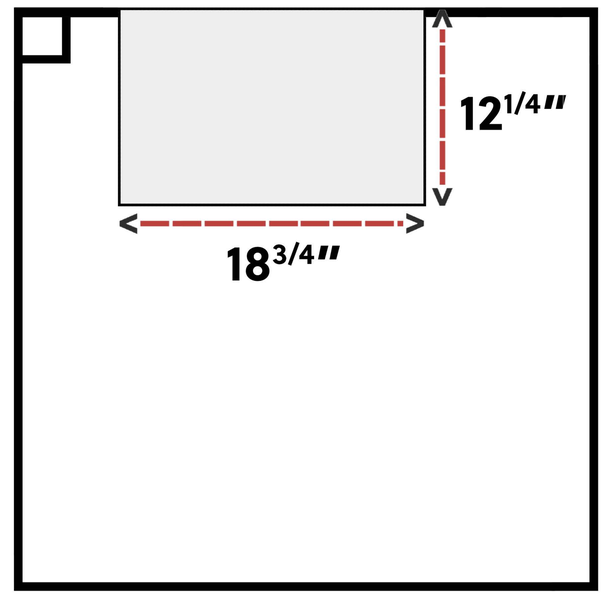
Island Side View